Diritti riservati All rights reserved

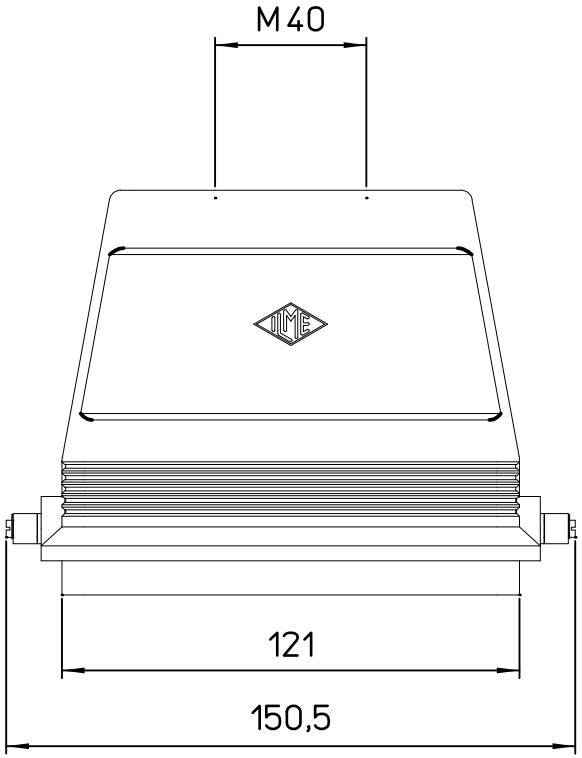

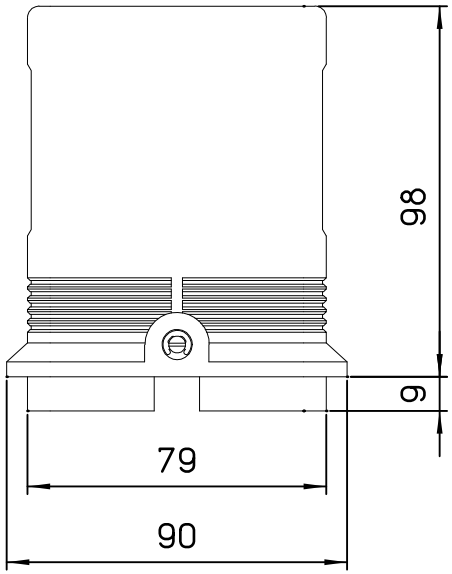

dimensions in mm	MFV 48 L40	Scale
Date 14/12/06	hood top entry M40 no adapt.	1:2
Sign.		